# 스테인레스 스틸 미압계 STAINLESS STEEL PRESSURE GAUGE

## SUMMARY

**NP-305S Series is an instrument specially designed for measuring the low pressure that can't be measured with a bourdon pressure gauge, element uses chamber. Using the various gas pipe pressure measured or mainly used for the low pressure measurements of the various applications.**

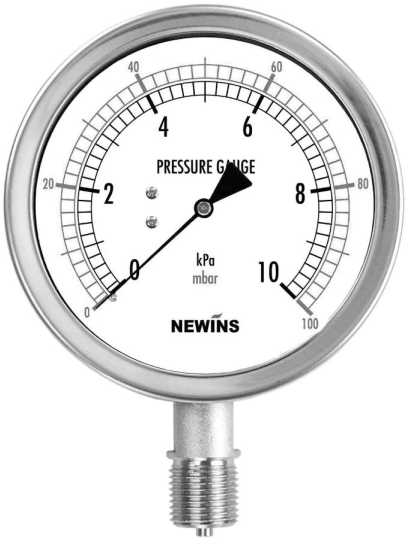


**Model. NP-305S-1**

## SPECIFICATIONS

- **Diameter :** 75,100,150mm
- **Accuracy**
  75,100,150mm : ±1.5% of Full Scale
- **Scale Range :**
  75,100mm : -1 ~ -100 kPa, ±1 ~ ±50 kPa,
- **Working Pressure :**
  Static Pressure : 75% of Full Scale
  Fluctuating Pressure : 60% of Full Scale
- **Working Temperature**
  Ambient : -20~65℃
  Fluid : -20~80℃
- **Process connection :**
  STS 316
- **Element**
  STS 304,STS 316
- **Case, Cover**
  STS 304
- **Window**
  General Glass
- **Movement**
  Brass
- **Dial**
  Aluminum
  White Coating
- **Pointer**
  Aluminum
  Black Coating
- **Type :**
  NP-305S-1 (Rimless Type)
  NP-305S-2 (Surface Type)
  NP-305S-3 (Flush Mounting Type)
  NP-305S-4 (Panel attachment Type)
- **Process connection :**
  75mm : 1/4", 3/8"PT & NPT, PF
  100mm : 1/4", 3/8", 1/2"PT & NPT, PF
  150mm : 1/4", 3/8", 1/2"PT & NPT, PF
- **Option :**
  Accessories

## DIMENSION

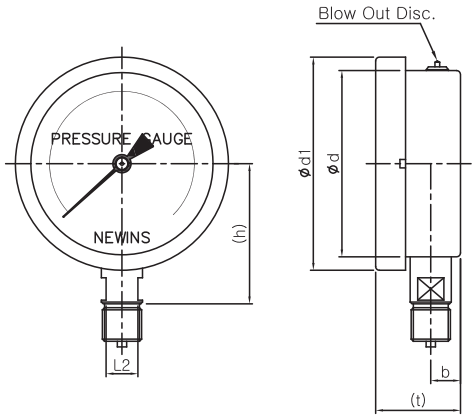


Model.NP-305S-1(A)

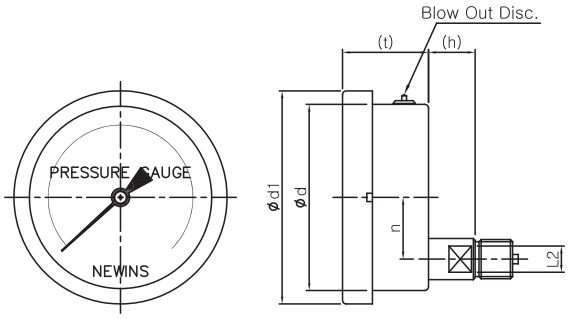


Model.NP-305S-3(D)

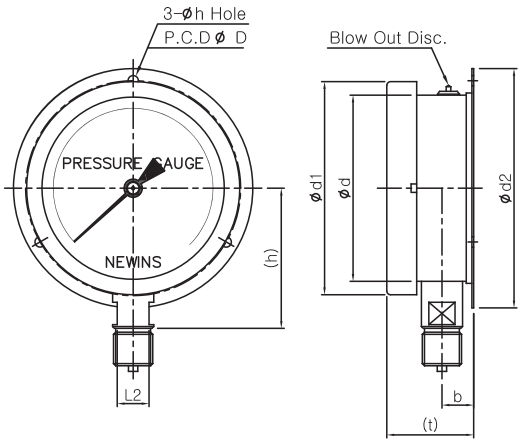


Model.NP-305S-2(B)

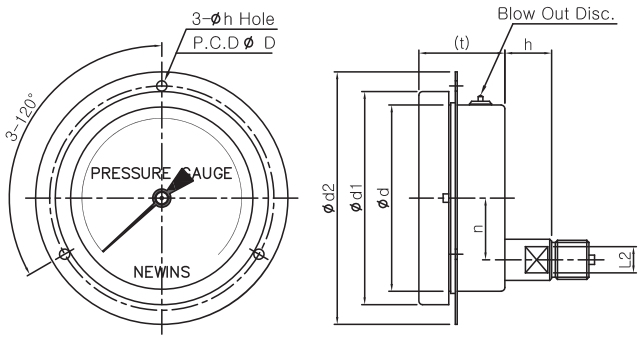


Model.NP-305S-4(BD)

## STANDARD SPECIFICATIONS

Dimensions (mm)

| Dial | Model No. | ⌀d | ⌀d1 | ⌀d2 | b | n | t | L1 | L2 | h | ⌀h | ⌀D |
|---|---|---|---|---|---|---|---|---|---|---|---|---|
| 75 | NP-305S-1(A) | 76.5 | 78 | 100 | 13 | - | (50) | 17 | - | (50) | - | - |
| | NP-305S-3(D)/4(BD) | 77 | 88 | 107 | - | 22 | (40) | - | 14 | (20) | 4.5 | 97 |
| 100 | NP-305S-1(A)/2(B) | 100 | 114 | 128 | 13 | - | (46) | - | 17 | (75) | 5.5 | 115 |
| | NP-305S-3(D)/4(BD) | | | 135 | - | 33 | (46) | - | | (25) | | 120 |
| 150 | NP-305S-1(A)/2(B) | 152 | 168 | 188 | 17 | - | (50) | - | 17 | (100) | 5.5 | 173 |
| | NP-305S-3(D)/4(BD) | | | | - | 33 | (50) | - | | (33) | | |