일반 미압계 GENERAL LOW PRESSURE GAUGE

SUMMARY

NP-305 Series is an instrument specially designed for measuring the low pressure that can't be measured with a bourdon pressure gauge, element uses chamber. Using the various gas pipe pressure measured or mainly used for the low pressure measurements of the various applications.

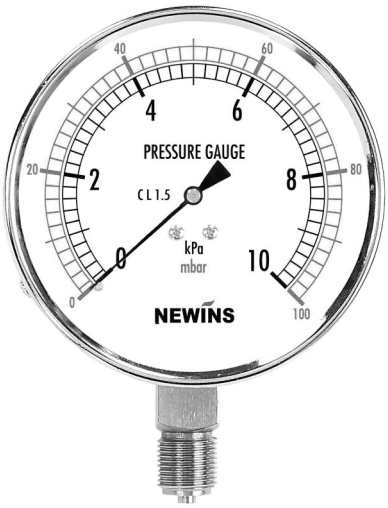

Model. NP-305-1

SPECIFICATIONS

- **Diameter :** 75,100mm
- **Accuracy**
  75,100mm : ±1.5% of Full Scale
- **Scale Range :**
  75,100mm : -5 ~ -50 kPa, ±5 kPa ~ ±50 kPa
  5 kPa ~ 50 kPa
- **Working Pressure :**
  Static Pressure : 75% of Full Scale
  Fluctuating Pressure : 60% of Full Scale
- **Working Temperature**
  Ambient : -20~65℃
  Fluid : -20~80℃
- **Process connection :**
  Brass(C3604be), STS 304
- **Element**
  Phosphor Bronze
- **Case, Cover**
  DS-1051,1052 Steel(SPCD)
  Cr-Plating
  DS-1054,1054 STS 304
- **Window**
  General Glass
- **Movement**
  STS 304
- **Dial**
  Aluminum
  White Coating
- **Pointer**
  Aluminum
  Black Coating
- **Type :**
  NP-305-1 (Rimless Type)
  NP-305-2 (Surface Type)
  NP-305-3 (Flush Mounting Type)
  NP-305-4 (Panel attachment Type)
- **Process connection :**
  75mm : 1/4", 3/8"PT & NPT, PF
  100mm : 1/4", 3/8"PT & NPT, PF
- **Option :**
  Accessories

DIMENSION

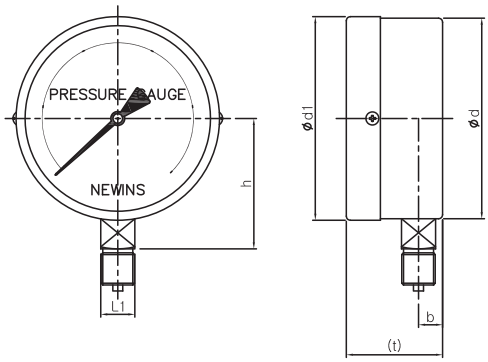

Model.NP-305-1(A)

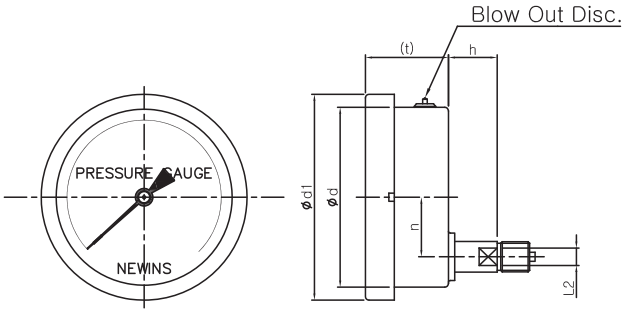

Model.NP-305-3(D)

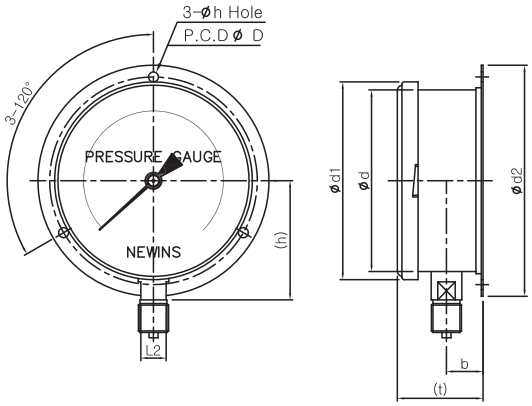

Model.NP-305-2(B)

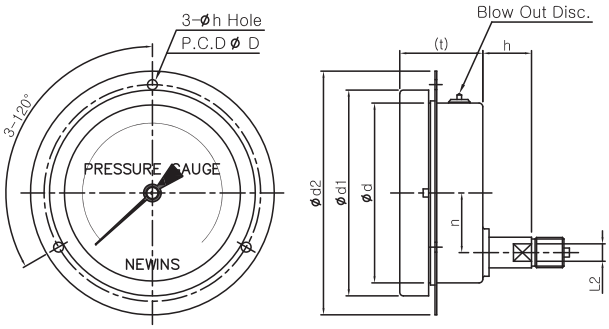

Model.NP-305-4(BD)

STANDARD SPECIFICATIONS

Dimensions (mm)

Dial	Model No.	ød	ød1	ød2	b	n	t	L1	L2	h	øh	øD
75	NP-305-1(A)/2(B)	76.5	78	100	13	-	(50)	17	-	(50)	4.5	88
	NP-305-3(D)/4(BD)			107	-	22	(40)	-	14	(19)		97
100	NP-305-1(A)	100	101.5	-	12	-	(48)	17	-	(65)	-	-
	NP-305-2(B)	101	110	128	20	-	(47)	-	14	(66)	5.5	128
	NP-305-3(D)/4(BD)	100	114	135	-	33	(40)	-	17	(27)		135