슬림형 펄-스 변환기 Slim Type Isolated Pulse Converter(Socket)

FEATURES

- **Multi input** (Pulse voltage, Contact, Open collector, DC 4.00~20.00mA)
- **High response**
- **Peak hold function** (Highest & Lowest)
- **Pulse output** (O.C, Contact, Pulse voltage)
- **1 point alarm & Dead band set**
- **Isolation current output** (DC 4.00~20.00mA)
- **Sensor power source DC 12V in STD specification** (* DC 24V Option)

SPECIFICATIONS

▹ **mA input** : DC 4.00~20.00mA

▹ **Pulse input**

Low level voltage : DC 0.7V or less
High level voltage : DC 1.5V or more
Max high voltage : DC 30V
Input resistance : 150kΩ

Range Code	Input	Maximum setting range
Range 0	4.00~20.00mA	-
Range 1	0.000~1.000Hz	1.00Hz
Range 2	0.000~9.999Hz	10.0Hz
Range 3	0.00~99.99Hz	100Hz
Range 4	0.0~999.9Hz	1.000Hz
Range 5	0.0000~9.999kHz	10.00kHz
Range 6	0.00~40.00kHz	40.00kHz

* Others is order made

▹ **Measuring and display cycle** : Minimum 1s. more short according to input frequence

▹ **CMRR(Common Mode Rejection Ratio)** : 140dB or more

▹ **NMRR(Normal Mode Rejection Ratio)** : 60dB or more

▹ **Moving average filter by selection**
: None, Average 4, Average 8, Average 16, Average 32

▹ **Built-in sensor power source** : DC 12V 30mA ±0.5%

▹ **Accuracy** : ±0.2% FS

▹ **Isolation current output(Option)**

Current : DC 4.00~20.00mA
Maximum load resistance : 600Ω
Insolation resistance (Input-Output) : 100MΩ or more(DC 500V)

▹ **Isolation voltage output(Option)**

Voltage : DC 0~10V
Minimum load resistance : 1kΩ or more
Insolation resistance(Input-Output) : 100MΩ or more(DC 500V)

▹ **Pulse output**

Open collector output : Max 100Hz, DC 50V/within 30mA
Voltage output : Max 100Hz, Lo(DC 0V), Hi(DC 24V)
Relay contact output : Max 5Hz same as alarm

▹ **Alarm Output**

Contact output type : Normal open, Normal close
Max switching power : 60W 125VA
Max switching voltage : DC 220V, AC 250V
Max switching current : DC 2A, AC
Max Carrying current : DC 3A, AC

▹ **Ambient temperature & Humidity**

Operation : -10~50℃, 10~90%
Storage : -20~70℃, 5~95%

▹ **Power supply**

Voltage : AC 110/220V(50~60Hz) by S/W
DC 24V(Option)
Power consumption : Max 4VA
Isolation resistance : 100MΩ , DC 500V
(FG-Input, FG-Power, Power-Input, Input-Output)

▹ **Etc**

Weight : 500g
Mounting : Din rail & wall mounted
Dimension : 50(W) X 80(H) X 102(D)mm

PARTS NAME

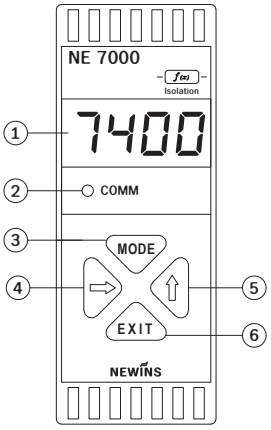

① Measured value display
② MODE Key :
Storage the set data and change the operation menu
③ ⇨ Key :
Enter into the data setting mode and modify the changed location
④ ⇧ Key :
Change the data value
⑤ EXIT Key :
Out of mode

MAJOR FUNCTIONS

▹ **Display scaling function(mV, Volt, mA only)**

This function changes and sets the display value according to scale and input range.

Ex) In case of input range 0.00~10.00Hz and
Level 0.00~7.00t/m

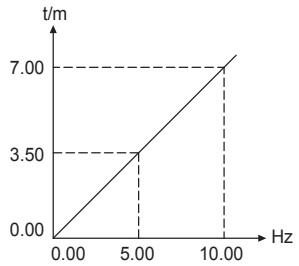

Setting to
Range Code : 3(0~99.99Hz)
High Range : 10.00Hz
Low Range : 0.00Hz
High Scale : 7.00t/m
Low Scale : 0.00t/m

▹ **Current output scaling function**

This function is that 4.00~20.00mA output value is changed by output scale.

Ex) In case of display value 0.00~7.00t/m,
Output 4.00~20.00mA

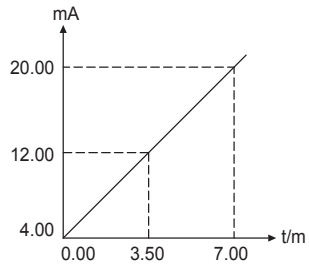

Setting to
High Out Scale : 7.00t/m
Low Out Scale : 0.00t/m

▹ **Pulse output scaling function**

If input is mA(Range 0), it sets pulse number per hour when full scale(20mA).

Ex) Setting 3600, it outputs 3600 pulse a hour(1 pulse a second) when 20mA current inputs. If input is pulse (Range : 1~6), it sets a rate of input versus output.

Ex) Setting 100, It output 1 pulse when 100 pulse inputs.

▹ **Sensor compensation function**

The function is useful for compensating error by long sensor line or changed zero point by aged sensor.

Ex) Before sensor adjust = 510℃
After sensor adjust
= measured value + compensated value
= 510 - 10 = 500℃

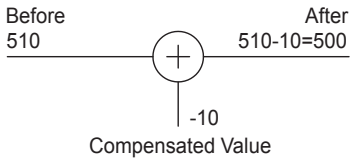

▹ **Function(Volt, mA type only)**

L in
Pass the input as it is.
Used for general input type and linearity input.

root
Pass the input after √. Used for flow rate by orifice.

L int
Like level measuring, when it does not display measuring under zero, it always can display zero by using limit function.

▹ **Alarm function**

Alarm type : High, Low

Ex) AL-1 : High alarm value 500.0,
Alarm dead band setting 0.5

The high alarm(AL-1) is ON when the present value(PV) is 500.0 or more, and OFF when 499.5 or less.

The high alarm(AL-2) is OFF when the present value (PV) is 100.5 or more, and ON when 100.0 or less.

▹ **Filter function**

Filter is moving average filter and it has 4 kinds of function.

nonE
It displays the change of input without filter.

Au 4, 8, 16, 32
It displays in recent input No 4,8,16 sample average.
Setting filter function delays reponse.
Do not use filter when high speed response is needed.
When output and display value are changed by irregular input, it is possible to get regular input and display value by using filter function.

슬림형 펄-스 변환기 Slim Type Isolated Pulse Converter(Socket)

ORDERING CODE

NE 74			-			Description
Input	0					Pulse input
	1					DC 4.00~20.00mA input
Analog output		0				solation current output DC 4.00~20.00mA
		1				Isolation current output DC 0~10V
		2				Isolation current output DC 4.00~20.00mA + OC pulse output
		3				Isolation current output DC 4.00~20.00mA + Relay Contact pulse output
		4				Etc(Consult to the factory)
Power				0		AC 85~265V(45~65Hz)
				1		DC 24V(Option)
Interface					0	None
					1	RS-485
					2	Etc

TERMINAL DIAGRAM

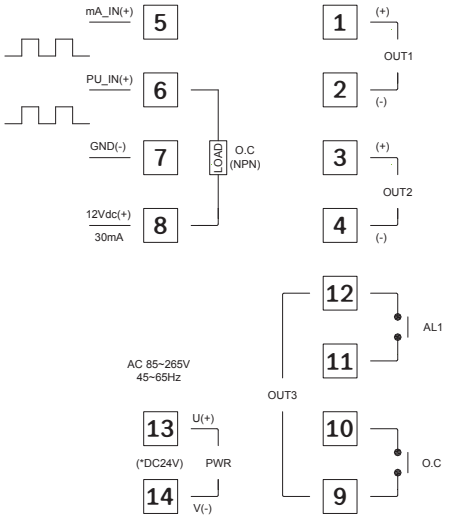

DIMENSION & PANEL CUT

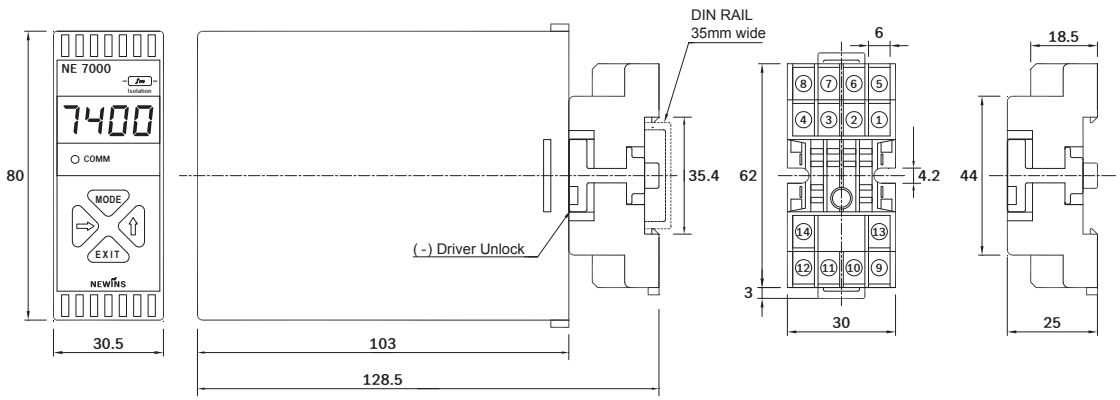

* When mounting, no extra space is needed between units